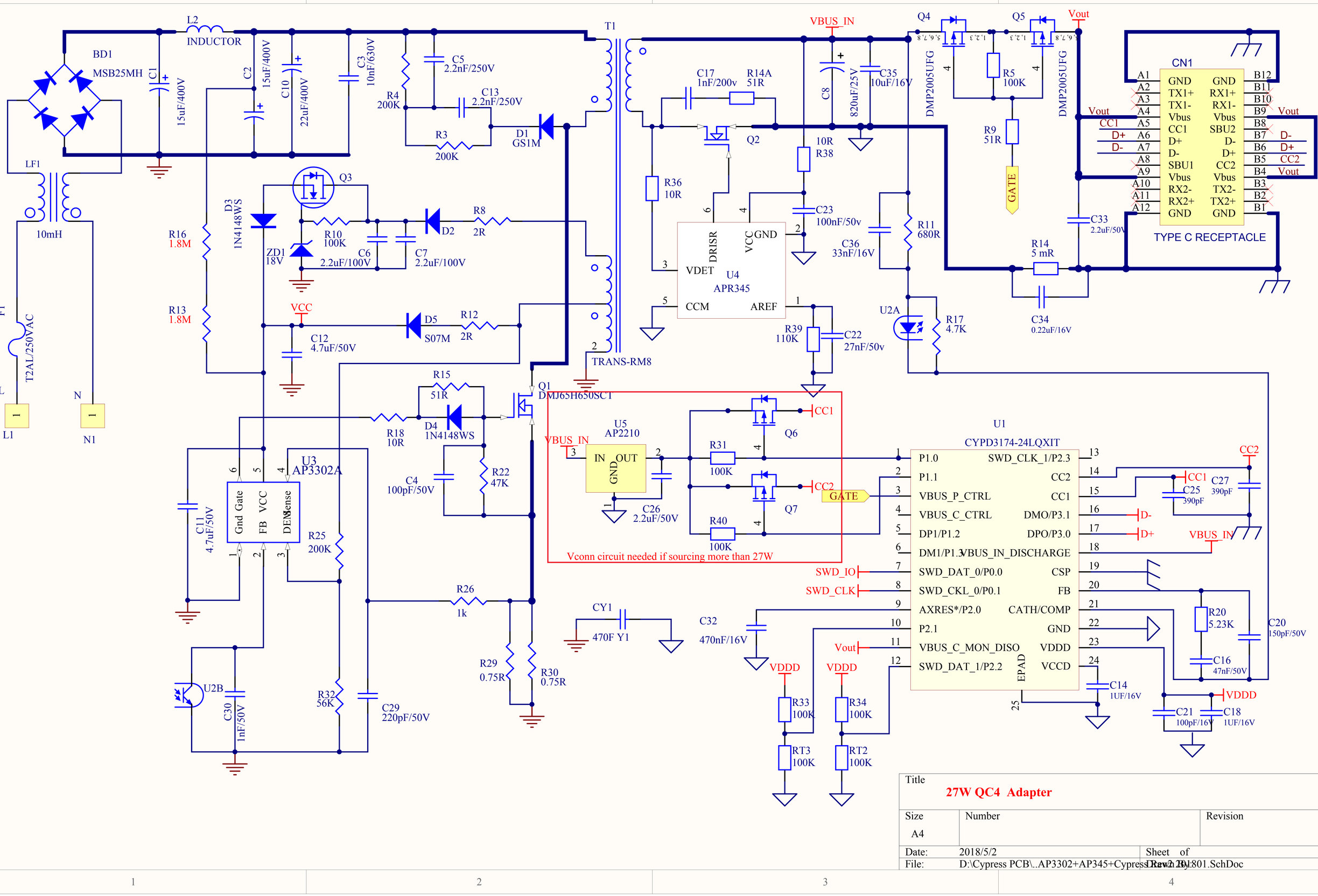

Title	**27W QC4 Adapter**	
Size: A4	Number	Revision
Date: 2018/5/2		Sheet of
File: D:\Cypress PCB\..AP3302+AP345+Cypress Rev2.1\801.SchDoc		Drawn By: